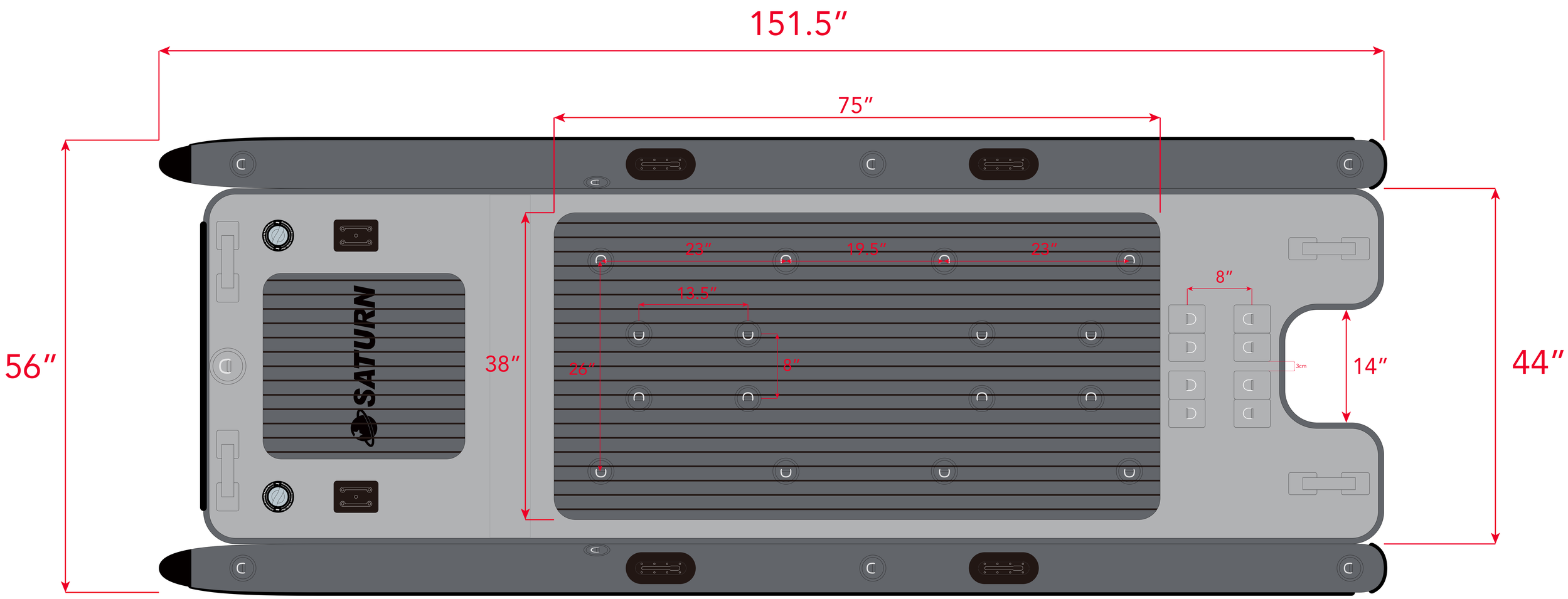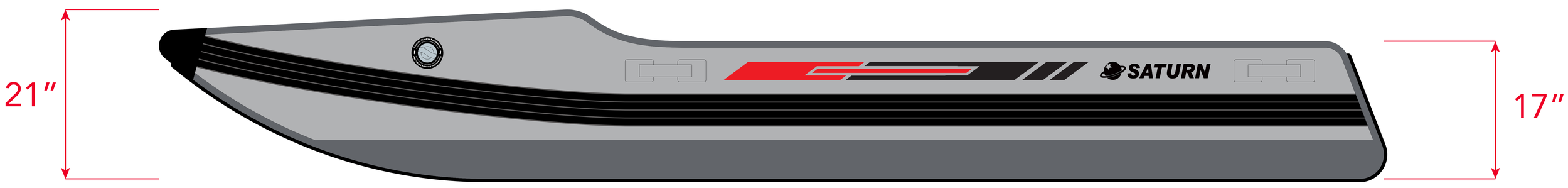PANTONE Cool Gray 5 C PANTONE Cool Gray 10 C